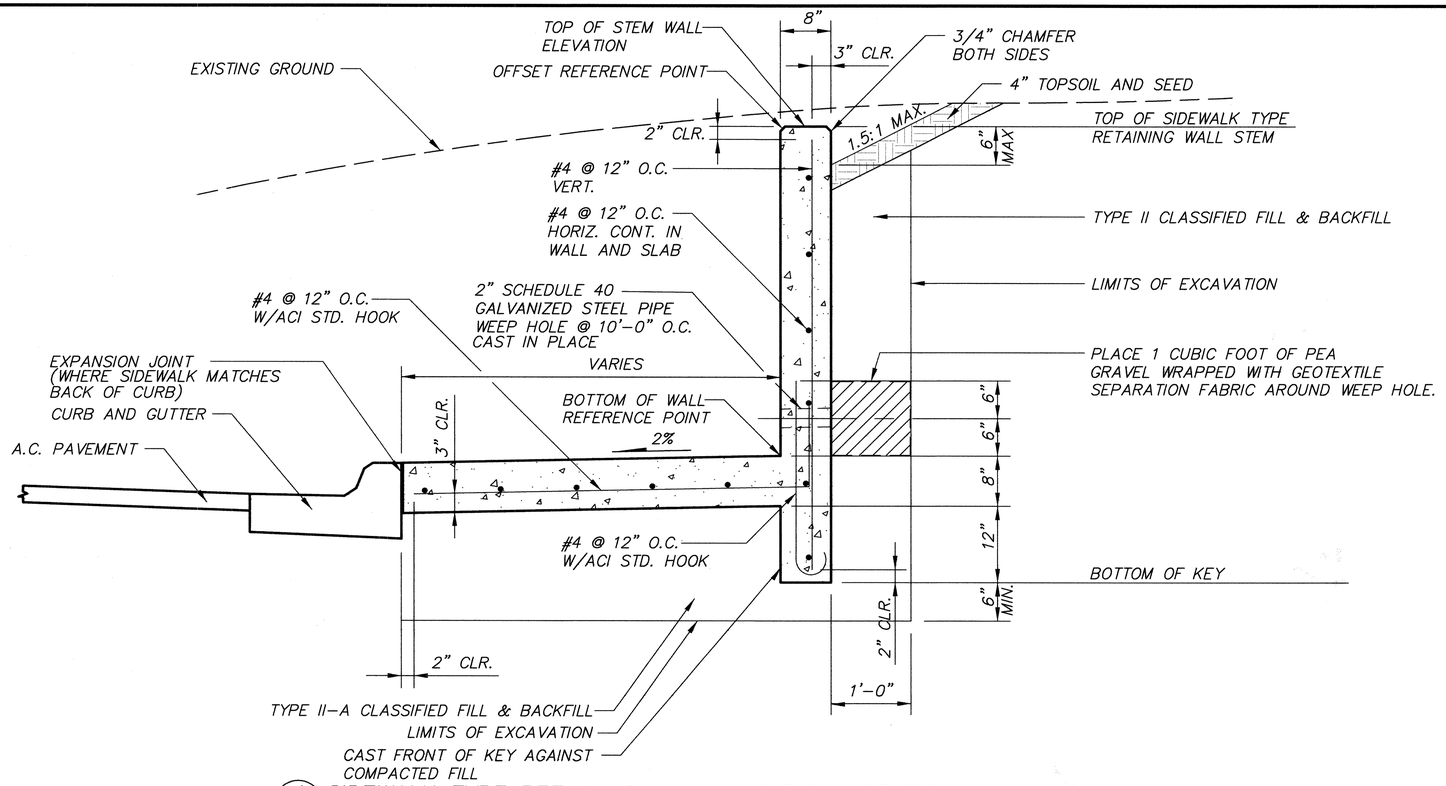

A SIDEWALK TYPE RETAINING WALL – TYPICAL SECTION

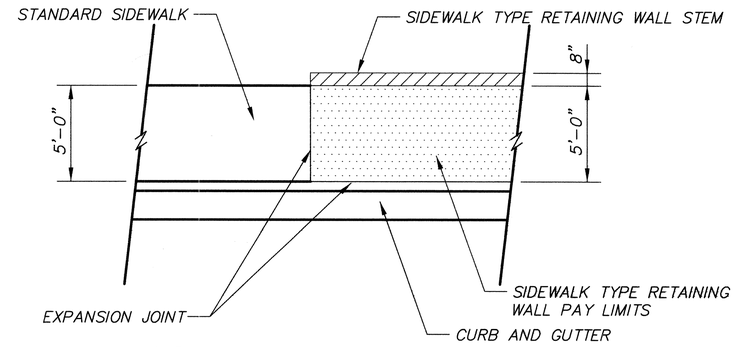

B TRANSITION – DETAIL 1

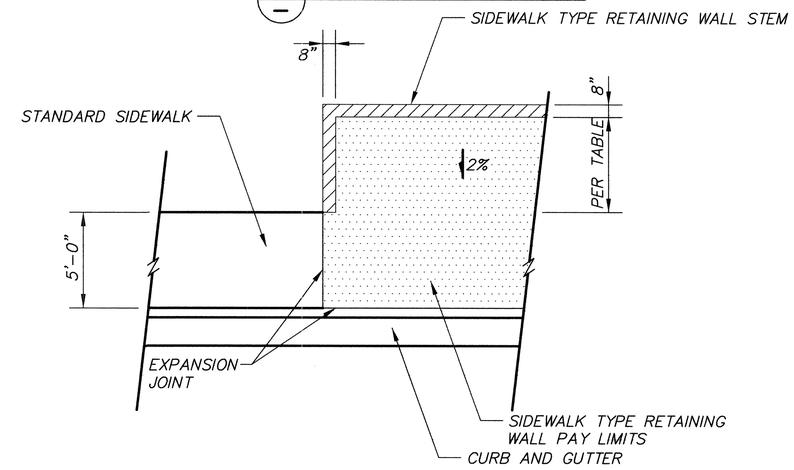

C TRANSITION – DETAIL 2

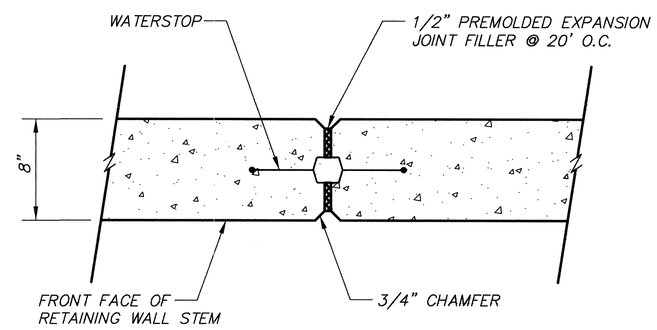

D RETAINING WALL EXPANSION JOINT – DETAIL

SIDEWALK TYPE RETAINING WALL TABLE

POINT	STATION	OFFSET	TOP OF WALL ELEV.	BOTTOM OF WALL ELEV.
RA1	226+01.50	30.65 RT	135.90	135.69
RA2	226+01.50	39.88 RT	139.75	135.87
RA3	226+01.50	41.42 RT	139.75	135.90
RA4	226+20.10	41.42 RT	139.75	136.10
RA5	226+20.10	30.65 RT	136.25	135.89
RB1	226+71.85	30.64 RT	137.75	136.50
RB2	226+71.85	36.30 RT	139.50	136.62
RB3	226+80.95	36.30 RT	139.50	136.75
RB4	226+80.95	30.64 RT	137.75	136.12
RB5	227+05.91	30.64 RT	M.E.	M.E.

POINT	STATION	OFFSET	TOP OF WALL ELEV.	BOTTOM OF WALL ELEV.
RC1	225+61.45	53.15 LT	M.E.	M.E.
RC2	225+90.31	51.83 LT	137.00	135.41
RC3	225+90.35	60.64 LT	136.50	135.36
RC4	225+96.74	66.27 LT	135.35	134.71
RC5	226+01.92	68.69 LT	134.50	134.04

RETAINING WALL NOTES:
1. CLASS AA-3 CONCRETE, F'c = 3500 P.S.I.
2. Fy = 60,000 P.S.I.
3. ONLY ASTM A615, GRADE 60 REINF. SHALL BE USED
4. FOOTING, STEM, AND KEY SHALL BE CAST IN PLACE
5. SIDEWALK TYPE RETAINING WALLS SHALL BE PAID FOR UNDER PAY ITEM 30.04 PORTLAND CEMENT CONCRETE (CLASS AA-3). LIMITS OF PAYMENT FOR SIDEWALK TYPE RETAINING WALL SHALL EXTEND TO THE TOP BACK OF CURB.

FIELD BOOKS	BM NO.	LOCATION	ELEV.
DESIGN: 06-01	MOA 13	9760 Old Seward Highway	141.24'
	MOA 16	10330 Old Seward Highway	138.76'
STAKING:			
ASBUILT:			
CONTRACTOR:	BASIS OF DATUM:	1972 N.G.S. DATUM	
INSPECTOR:			
CONSTRUCTION RECORD	VERTICAL DATUM		

DATA	DRAWN BY	CHECKED BY	DATA	DRAWN BY	CHECKED BY
BASE	–	–	TELEPHONE	–	–
TOPOGRAPHY	JDE	DWH	ELECTRIC	–	–
PROFILE	–	–	CABLE TV	–	–
SANITARY SEWER	–	–	TRAFFIC SIGNAL	–	–
STORM SEWER	–	–	DESIGN	–	–
WATER	–	–	QUANTITIES	–	–
GAS	–	–	MUN. FINAL CHECK		

PLAN CHECK

REV	DATE	DESCRIPTION	BY	REV	DATE	DESCRIPTION	BY

REVISIONS

USKH
ARCHITECTURE • ENGINEERING
LAND SURVEYING • PLANNING

STATE OF ALASKA 49TH STEVEN M. KARI No. CE 9203 REGISTERED PROFESSIONAL ENGINEER
SEAL

MUNICIPALITY OF ANCHORAGE

PROJECT MANAGEMENT AND ENGINEERING DEPARTMENT

PM&E No. 04-22 | 100TH AVENUE AT OLD SEWARD HIGHWAY SIGNALIZATION | SCH. A

RETAINING WALL DETAILS

SCALE: 1"=20' | DATE: JAN 2008 | GRIDS: SW2430, SW2530, SW2431, SW2531 | ACCT. NO. | SHEET 14 of 32

FILE NO.–